NITECORE®
The All-Round Flashlight Expert

P36 User Manual

Features
- Utilizes a CREE MT-G2 LED
- Max output of up to 2000 lumens
- Runtime of up to 325 hours
- A multifunctional rotary switch offers unprecedented ease of use
- 10 brightness levels and 5 special modes for multiple applications
- Advanced temperature regulation (ATR) technology ensures stability and longevity
- High efficiency constant current circuitry provides unwavering and dependable output
- Features intelligent memory function in regular output modes
- Features 2 x battery power indicators on the tail
- Direct access to turbo/ultra-low
- Utilizes a micro-textured metal reflector for peripheral illumination
- Stainless steel bezel ring protects core components from damage
- Toughened ultra-clear mineral glass with anti-reflective coating
- Constructed from aerospace grade aluminum alloy
- HAIII military grade hard-anodized
- Waterproof in accordance with IPX8
- Impact resistant to 1 meter
- Tail stand capability

Dimensions
Length: 6.81" (173mm)
Head diameter: 1.97" (50mm)
Tail: 1.10" x 1.65" (28mm x 42mm)
Weight: 8.89oz (252g)(without battery)

Accessories
Battery carrier, quality holster, lanyard, rubber switch casing, spare O ring

Battery Options

	TYPE	Nominal voltage	Compatible
Primary Lithium battery	CR123	3V	Y (Recommended)
18650 Rechargeable Li-ion battery	18650	3.7V	Y (Recommended)
Rechargeable Li-ion battery	RCR123	3.7V	Y

Brightness & Runtime

FL1 STANDARD	TURBO	HIGH*	MID*	LOWER	STROBE	SLOW FLASHING	QUICK FLASHING	LOCATION BEACON	SOS
	2000 LUMENS	1500 LUMENS	380 LUMENS	2 LUMENS	2000 LUMENS	2000 LUMENS	2000 LUMENS	2000 LUMENS	2000 LUMENS
	45min	1h	7h30min	325h	—	—	—	—	—
	300m	229m	118m	9m	—	—	—	—	—
	22300cd	13100cd	3500cd	21cd	—	—	—	—	—
	1m (Impact Resistant)								
	IPX8, 2m (Waterproof AND Submersible)								

NOTE: The above data has been measured in accordance with the international flashlight testing standards ANSI/NEMA FL1 using 2 x 18650（3.7V 2600mAh) batteries under laboratory conditions. The data may vary during real-world use due to battery type, individual usage habits and environmental factors.

* The ten brightness levels provide output from 2 lumens to 2000 lumens, with corresponding runtime ranging from 45 minutes to 325 hours.
The ANSI lumen rating for each of the ten brightness levels is as follows:

Level	1	2	3	4	5	6	7	8	9	10
Lumens	2	20	80	210	380	600	850	1100	1500	2000

Operating Instructions
Battery Installation
Insert 2 x 18650 batteries or 4 x CR123 batteries as illustrated:

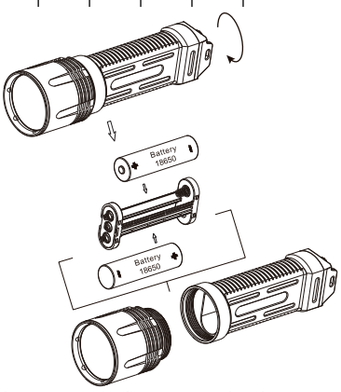

NOTE:
After loading the batteries, the power indicators will blink to indicate the battery power levels. Please refer to the "Power Tips" section of this manual for details.

WARNING
1. This product CANNOT be powered by flat-top batteries.
2. AVOID direct eye exposure.

Momentary Illumination
Press and hold the ON/OFF button halfway to turn the light on, simply release to turn the light off.

ON/OFF
To switch the light on: Press the ON/OFF button until a click is heard

To switch the light off: Press the ON/OFF button again until a click is heard

Brightness Levels
NOTE: The P36's multiple functions can be accessed by operating the rotary switch.
With the light switched on, rotate the rotary switch to access ten brightness levels.
Rotate the rotary switch counterclockwise to increase output lumens until the turbo mode is selected.
Alternatively, rotate the rotary switch clockwise to lower output lumens until the ultra-low mode is selected

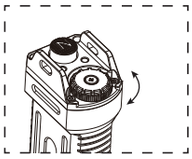

Direct Access to Ultra-low/Turbo
With the light switched off, slide the rotary switch counterclockwise quickly and press the ON/OFF button within three seconds to enter turbo mode (2000 lumens);
Alternatively, with the light switched off, slide the rotary switch clockwise quickly and press the ON/OFF button within three seconds to enter ultra-low mode (2 lumens).
NOTE: The P36 has an intelligent memory function, ensuring the last used output will be saved and resumed when the P36 is reactivated.

Special Modes (Strobe/Slow Flashing/Quick Flashing/Location Beacon/SOS)
With the light switched on, press the rotary switch to enter Strobe mode. To cycle through the special modes (slow flash, quick flash, location beacon, SOS and strobe) simply rotate the rotary switch counterclockwise. To resume the previously used special mode, simply rotate the rotary switch in reverse. To exit special modes, simply press the rotary switch again to resume the last used brightness level.
NOTE: The P36 does not have an intelligent memory function for any of its special modes.

Strobe Ready
Press and hold the rotary switch for over one second in any state to enter strobe mode immediately. Simply release to exit the strobe mode.

Power Tips
1. With the light on, the red power indicators will flash once every two seconds when battery power levels fall to 50%. The red power indicators will flash quickly when battery power is close to depletion
2. With the light off, tightening the bezel or pressing the rotary switch after battery installation will activate the two red power indicators on the tail. The power indicators will blink three times when power levels are above 50%; twice when power levels are below 50%; and once when battery power is close to depletion.

ATR Technology
Advanced temperature regulation (ATR) technology allows the P36 to dynamically adjust output performance according to its body temperature. This prevents damage from overheating and prolongs its working life.

Changing/Charging Batteries
Batteries should be replaced or recharged when output appears to be dim or the flashlight becomes unresponsive.

Maintenance
Every 6 months, threads should be wiped with a clean cloth followed by a thin coating of silicon-based lubricant.

Warranty Service
All NITECORE® products are warranted for quality. Any defective / malfunctioning NITECORE® product can be repaired free of charge for a period of 60 months (5 years) from the date of purchase. Beyond 60 months (5 years), a limited warranty applies, covering the cost of labor and maintenance, but not the cost of accessories or replacement parts.
The warranty is nullified in all of the following situations:
1. The product(s) is/are broken down, reconstructed and/or modified by unauthorized parties.
2. The product(s) is/are damaged through improper use.
3. The product(s) is/are damaged by leakage of batteries.
For the latest information on NITECORE® products and services, please contact a local NITECORE® distributor or send an email to service@nitecore.com

※All images, text and statements specified herein this user manual are for reference purpose only. Should any discrepancy occurs between this manual and information specified on www.nitecore.com, information on our official website shall prevail. Sysmax Industry Co., Ltd. reserves the rights to interpret and amend the content of this document at any time without prior notice.

SYSMAX Ind.
SYSMAX Industry Co., Ltd.
TEL: +86-20-83862000
FAX: +86-20-83882723
E-mail: info@nitecore.com
Web: www.nitecore.com
Address: Rm 2601-06, Central Tower, No.5 Xiancun Road, Tianhe District, Guangzhou, 510623, Guangdong, China

Please find us on facebook: NITECORE Flashlight

CE

P22013618

Made in China

Thanks for purchasing NITECORE!